CUTTERS

CUT-75

CUT-120

CUT-150

GENERAL CHARACTERISTICS:

- Heavy duty construction, without vibrations, made of AISI-304 stainless steel.
- Machine made according to the European Directive 2006/42/CE.
- Head designed for a maximum of 6 knives, with adjustment system and dynamic balancing.
- Electric emergency brake and anti noise cover (obligatory in CE regulations).
- Switchgear cabinet made of stainless steel and IP65 control panel.
- Manual knives cover.
- Drainage cap in the trough for easy cleaning.
- Machine supplied with 6 knives and accessories.
- Semi-automatic unloader (Only for CUT-120 and CUT-150).

INDUSTRIES CASTELLVALL 2002, S.L.
Pol. Ind. Girona – Avda. Països Catalans, 162-164
17457 RIUDELLOTS DE LA SELVA (Girona - ESPAÑA)
Phone. +34 972 478 399 Fax +34 972 477 594
castellvall@castellvall.com

WWW.CASTELLVALL.COM

OPTIONS:

	CUT-75	CUT-120	CUT-150
Tachometer lap account and electronic thermometer.	✓	✓	✓
3 knives assembly.	✓	-	-
4 knives assembly.	-	✓	✓
Semi-automatic unloader	✓	-	-

TECHNICAL DATA:

The buttons panel activates the 2 bowl speeds and the 2 cutting speeds.
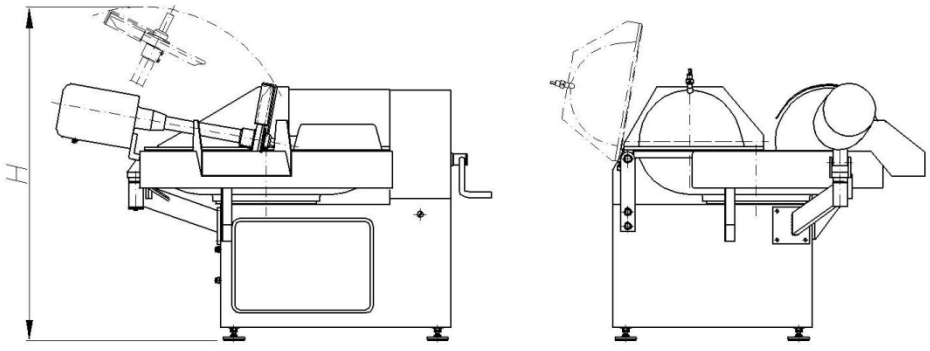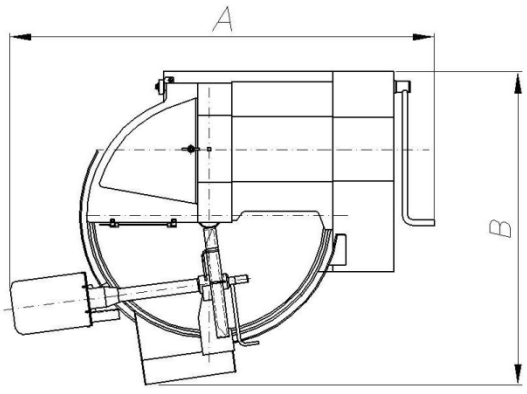
	CUT-75	CUT-120	CUT-150
Trough capacity	75 liter	120 liter	150 liter
Blades motor power	13 / 17 kw	17,5 – 27 kw	24 / 32 kw
Trough motor power	0,55 / 0,75 kw	0,75 / 1,5 kw	0,75 / 1,5 kw
Unloader motor power	0,55 kw	0,55 kw	0,75 kw
Blades motor speed	1.500-3.000 r.p.m	1.500-3.000 r.p.m	1.500 – 3.000 r.p.m
Trough motor speed	11 -22 r.p.m	11 – 22 r.p.m	11 – 22 r.p.m
Unloader motor speed	123 r.p.m	123 r.p.m	115 r.p.m
Weight	715 Kg (810 Kg with unloader)	1280 Kg.	1640 Kg.
Dimensions (AxBxH) mm.	1300x1050x1715	2210x1450x1750	2300x1470x1750
Dimensions with unloader (AxBxH) mm.	1815x1250x1785	2210x1450x1750	2300x1470x1750